| REV | ECN.NO: | BY | DATE |
|---|---|---|---|
| A0 | NEW DWG | 李占春 | 11.09.26 |

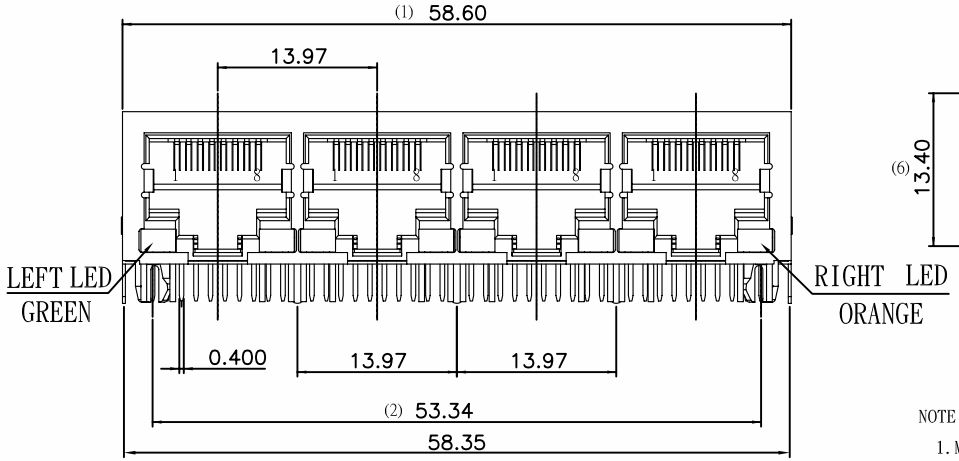


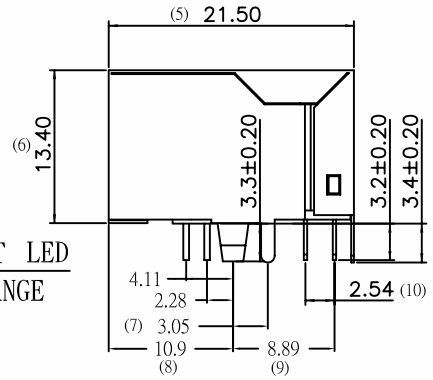


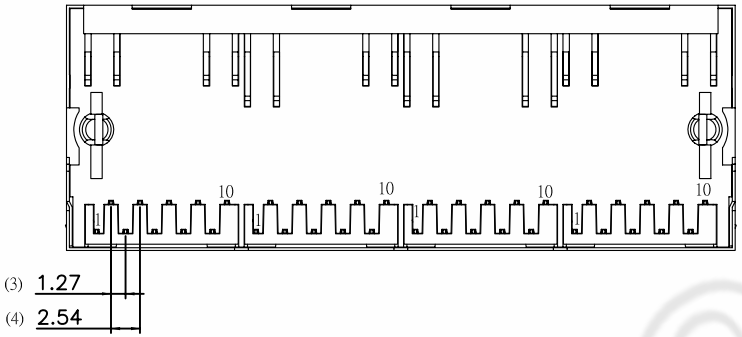


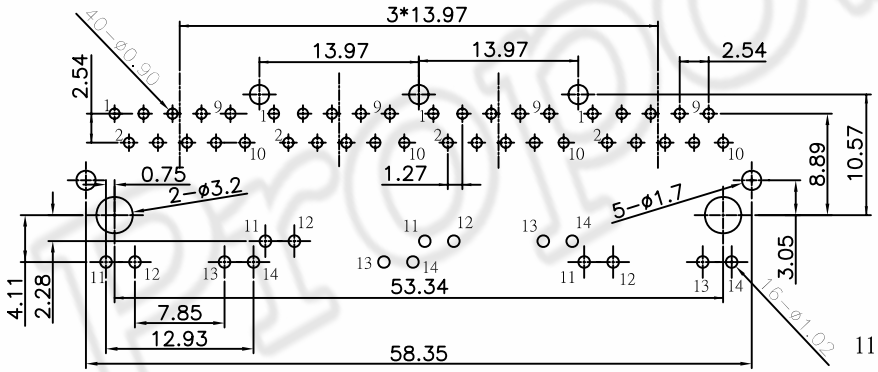


PCB LAYOUT

NOTE 1:

1. MATERIALS:

HOUSING:THERMOPLASTIC POLYESTER;

RJ CONTACT:COPPER ALLOY,T=0.35±0.02mm.

JOINT CONTACT:COPPER ALLOY,T=0.30±0.02mm.

SHELL:COPPER ALLOY,T=0.25±0.02mm.

2. PLATING:

RJ CONTACTS: SELECT GOLD PLATED OVER NICKEL UNDERPLATED OVERALL

JOINT CONTACTS: TIN PLATED OVER NICKEL UNDERPLATED OVERALL

SHELL: NICKEL UNDERPLATED OVERALL

3. SPECIFICATION:

OPERATING TEMPERATURE : 0°C~+70°C

STORAGE: -40°C~+85°C

DURABILITY: 750 CYCLES MIN

TYPE: BALANCE LOW PASS 100Ω IMPEDANCE

INSERTION LOSS: 1~100MHz-1.0dB MAX.

RETURN LOSS: 1~30MHz-18dB MIN.

30~60MHz-16dB MIN.

60~80MHz-12dB MIN.

CROSS TALK: @1~100MHz-35dB MIN.

COMMON MODE REJECTION: @1~100 MHz-30dB MIN

INDUCTANCE AT 100KHz 100mV,8mA DC BIAS: 350uH MIN.

HI-POT: 1500Vrms (INPUT TO OUTPUT)

DF Circuit Isolation Magnetic

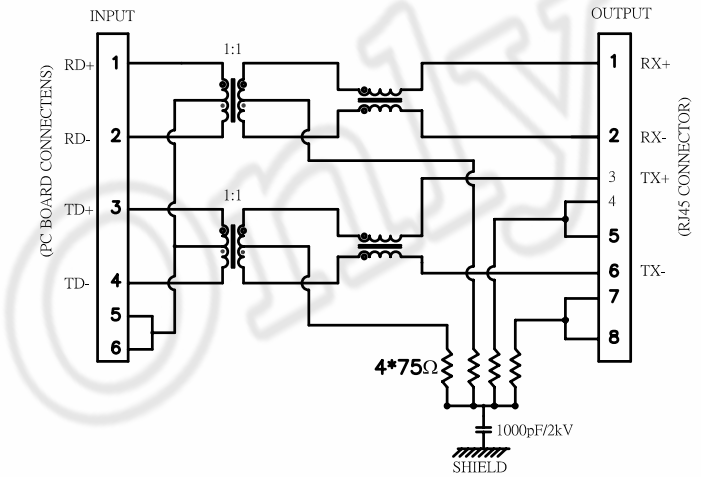


12 1 1 4 -14 J DF 0 2 1 -3 3 R

- RJ45帶濾波器
- 扁針PORT口下階全包
- 單層
- 4 PORT
- TYPE碼
- 左綠右橙
- DF線路
- 環保碼
- 3:PA46 BK
- 鍍半金6u"
- 延伸碼
- 腳後3.05mm
- 無彈片

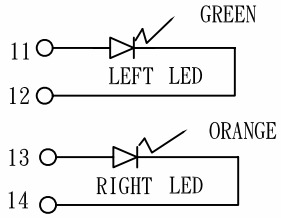


| CUSTOMER DRAWING | | | |
|---|---|---|---|
| -TOLERANCES- UNLESS OTHERWISE SPECIFIED | | | |
| X.X | ±0.35 | X.X° | ±3° |
| X.XX | ±0.25 | X.XX° | ±2° |
| X.XXX | ±0.15 | X.XXX° | ±1° |

Liteconn Co.,Ltd.

TITLE: Mag45 1*4 100M+LED

APPD:

CHECK:

DRAW: 李占春

DWG NO: 12114-14JDF021-33R

| DATE | SCALE | UNIT | PAGE |
|---|---|---|---|
| 2011.09.26 | 1:1 | MM | 1/1 |

COMPLIANCE WITH THE REQUIEMENT ☑ RoHS ☐ HF ☐ SONY00259 ☐ OTHER

※ NO USING RESTRICTED AND BANNED SUBSTANCE

Proposal Only