REV	ECN.NO:	BY	DATE
A0	NEW DWG	姜文斌	10.10.08

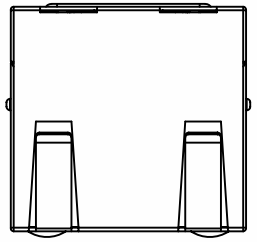

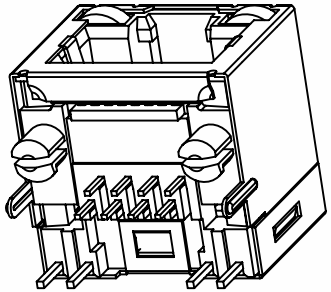

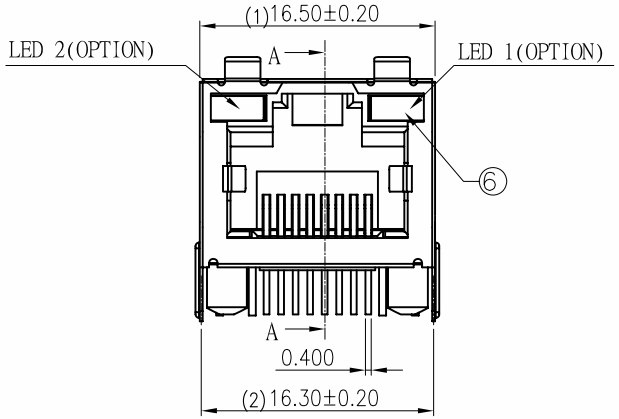

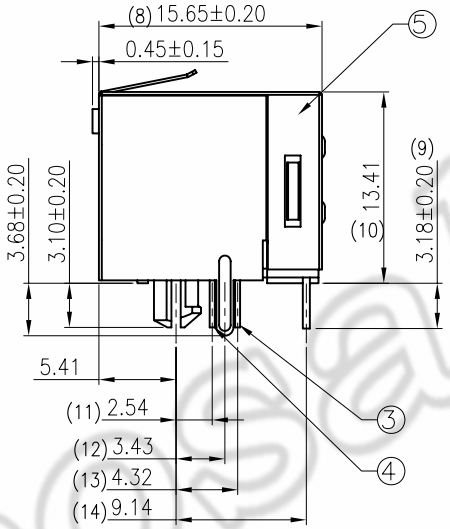

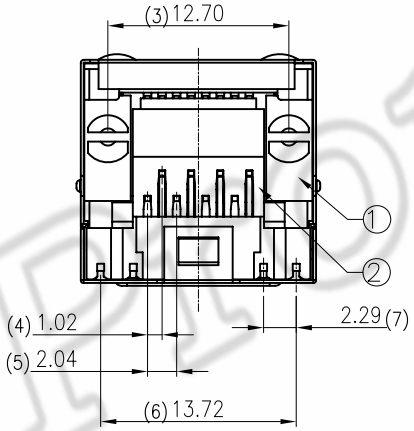

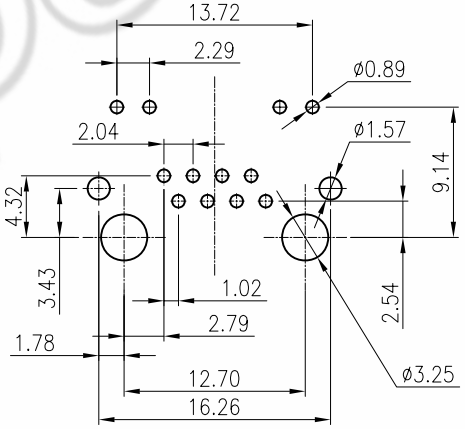

PCB LAYOUT

NOTES:

1. MATERIAL:
   1.1 HOUSING&COVER: HIGH TEMPERATURE THERMOPLASTIC WITH 30%G.F;94V-0 COLOR:SEE NOTES 6
   1.2 CONTACT:COPPER ALLOY
   1.3 SHELL:COPPER ALLOY
2. FINISH:
   2.1 CONTACT:
   GOLD PLATED(SEE TABLE) ON CONTACT AREA.
   2.54um [100u"] MIN.TIN PLATED ON SOLDER TAIL AREA.
   1.27um [50u"] MIN. NICKEL UNDER-PLATED OVERALL.
   2.2 SHELL:
   1.27um [50u"] MIN. NICKEL UNDER-PLATED OVERALL.
3. RECOMMENDED P.C.B THICKNESS : 1.6mm
4. OTHER GENERAL SPEC. TO REFER : RJ45 SERIES SPEC.
5. FOR WAVE SOLDERING LEAD-FREE PROCESS
6. 11711-01122250-X X X X

- R:RoHS
- COLOR:
  1: BLACK
- MATERIAL:
  1: PA66
  3: PA46
- PLATING:
  1.Au 1u"
  3.Au 6u"
  5.Au 30u"
- LAMP COLOR:
  1.LEFT YELLOW RIGHT GREEN

NO:	DESCRIPTION	MATERIAL	COLOR	REMARK
6	LED	SEE PART DRAWING		TIN PLATED
5	SHELL	SEE PART DRAWING		NI PLATED
4	CONTACT	SEE PART DRAWING		GOLD/TIN PLATED
3	CONTACT	SEE PART DRAWING		GOLD/TIN PLATED
2	COVER	SEE PART DRAWING	SEE PART DRAWING	UL 94V-0
1	HOUSING	SEE PART DRAWING	SEE PART DRAWING	UL 94V-0

TABLE

NO:	PART NO:	PLATING	MATERIAL	COLOR	REMARK
4	11711-01122250-511R	Au30u"	PA66	BLACK	RoHS
3	11711-01122250-331R	Au6u"	PA46	BLACK	RoHS
2	11711-01122250-311R	Au6u"	PA66	BLACK	RoHS
1	11711-01122250-111R	Au1u"	PA66	BLACK	RoHS

COPLIANCE WITH THE REQUIEMENT ☑ RoHS ☐ HF ☐ SONY00259 ☐ OTHER
※ NO USING RESTRICTED AND BANNED SUBSTANCE

CUSTOMER DRAWING

-TOLERANCES-
UNLESS OTHERWISE SPECIFIED

X.X	±0.35	X.X°	±3°
X.XX	±0.25	X.XX°	±2°
X.XXX	±0.15	X.XXX°	±1°

LITE Liteconn Co.,Ltd.

TITLE:RJ45扁針PORT□上階全包1X1PORT 腳柱3.3;2鐵腳2彈片腳后3.43

APPD:
CHECK:
DRAW: 姜文斌

DWG NO: 11711-01122250-XXXX

DATE	SCALE	UNIT	PAGE
2010.10.08	1:1	MM	1/1

Proposal Only