REV	ECN.NO:	BY	DATE
A0	NEW DWG	韋芳	10.10.20
A1	新增規格 ECN120142	董希曦	12.01.31

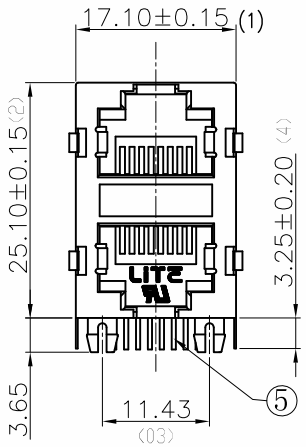

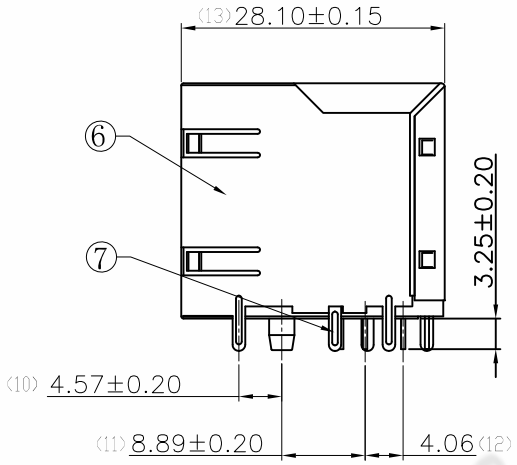

NOTES:
1. MATERIAL:
   1.1 HOUSING & COVER: HIGH TEMPERATURE THERMOPLASTIC, WITH 30% G.F; UL94 V-0; COLOR: SEE NOTES 6
   1.2 CONTACT: COPPER ALLOY ø0.45mm
   1.3 SHELL: COPPER ALLOY
   1.4 GROUND TERMINAL: COPPER ALLOY
2. FINISH:
   2.1 CONTACT:
   GOLD PLATING(SEE TABLE)
   2.2 SHELL:
   1.27um [50u"] MIN. NICKEL UNDERPLATED OVERALL.
   2.3 GROUND TERMINAL:
   2.54um[100u"] MIN TIN PLATED.
   1.27um [50u"] MIN. NICKEL UNDERPLATED OVERALL.
3. RECOMMENDED P.C.B THICKNESS : 1.6mm
4. OTHER GENERAL SPEC. TO REFER : RJ45 SERIES SPEC.
5. FOR WAVE SOLDERING LEAD-FREE PROCESS
6. 10121-01226431-X X X X
   - R: RoHS
   - COLOR: 1.HOUSING:BLACK
   - MATERIAL: A1 1.HOUSING: PA66 3.HOUSING: PA46
   - PLATING: 1.CONTACT: Au 1u" 3.CONTACT: Au 6u" A1 7.CONTACT: Au 1.5u"

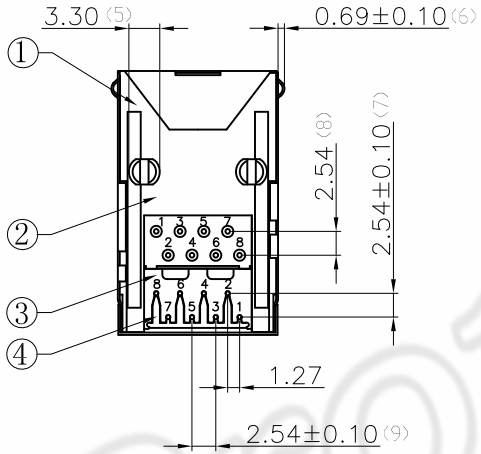

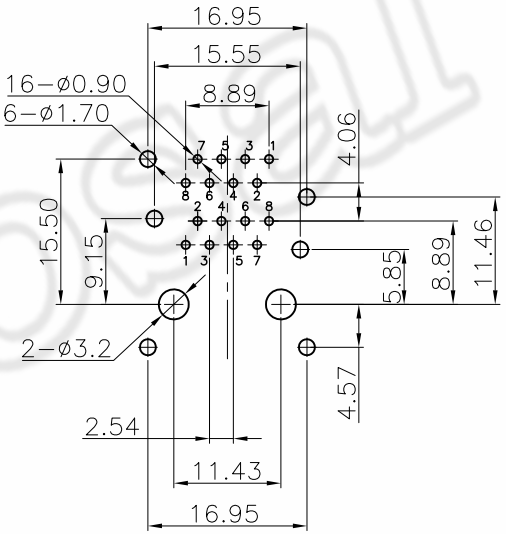

PCB LAYOUT

NO:	DESCRIPTION	MATERIAL	COLOR	REMARK
7	GROVND TERMINAL	SEE PART DRAWING		TIN PLATED
6	SHELL	SEE PART DRAWING		NI PLATED
5	CONTACT	SEE PART DRAWING		GOLD PLATED
4	COVER	SEE PART DRAWING		UL 94V-0
3	COVER	SEE PART DRAWING		UL 94V-0
2	COVER	SEE PART DRAWING	SEE PART DRAWING	UL 94V-0
1	HOUSING	SEE PART DRAWING	SEE PART DRAWING	UL 94V-0

TABLE

NO:	PART NO:	PLATING	MATERIAL	COLOR	ENVIRONMENTAL
5	10121-01226431-711R	Au1.5u"	PA66	BLACK	RoHS
4	10121-01226431-331R	Au6u"	PA46	BLACK	RoHS
3	10121-01226431-311R	Au6u"	PA66	BLACK	RoHS
2	10121-01226431-131R	Au1u"	PA46	BLACK	RoHS
1	10121-01226431-111R	Au1u"	PA66	BLACK	RoHS

A1

COPLIANCE WITH THE REQUIEMENT ☑ RoHS ☐ HF ☐ SONY00259 ☐ OTHER
※ NO USING RESTRICTED AND BANNED SUBSTANCE

CUSTOMER DRAWING			
-TOLERANCES- UNLESS OTHERWISE SPECIFIED			
X.X	±0.35	X.X°	±3°
X.XX	±0.25	X.XX°	±2°
X.XXX	±0.15	X.XXX°	±1°

Liteconn Co.,Ltd.

APPD:
CHECK:
DRAW: 韋芳

TITLE: RJ45下階圓針全包2X1PORT 8P8
DWG NO: 10121-01226431-XXXX

DATE	SCALE	UNIT	PAGE
2010.10.20	1:1	MM	1/1

Proposal only